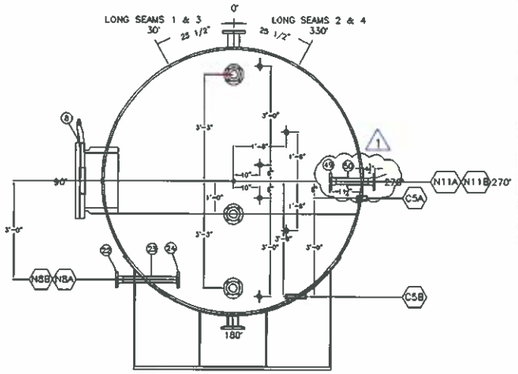

RIGHT END VIEW

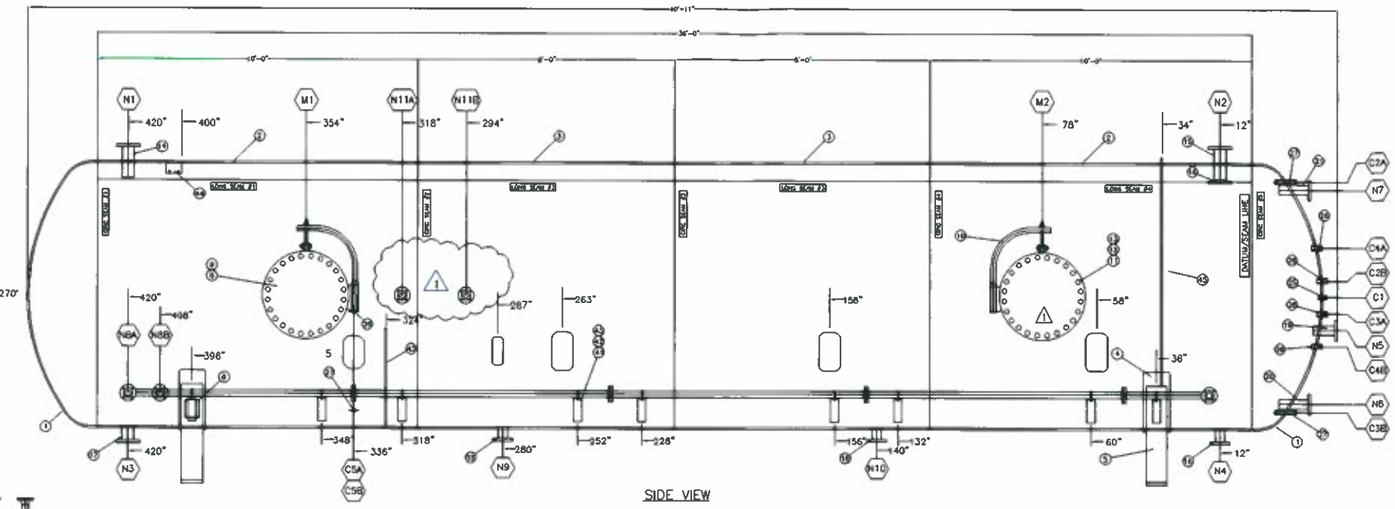

SIDE VIEW

STEAM COIL

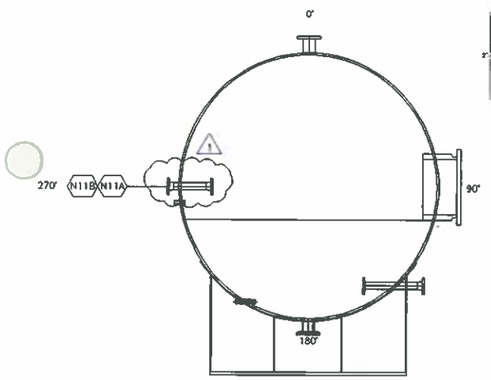

LEFT END VIEW

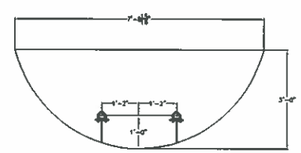

WEIR DETAILS

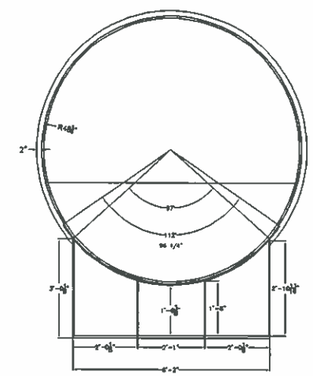

BLDG RING & SADDLE DETAIL

VESSEL DESIGN DATA – IMPERIAL (METRIC) UNITS

ASME SEC. VIII DIV 1, 2007 EDITION, 2009 ADDENDA

DESIGN INT: 196 psi(1351kPa) EXT: 15 psi(103kPa)	DIAMETER 96.0" I.D. (2438mm)
MAWP INT: 196 psi(1351kPa) EXT: 15 psi(103kPa)	LENGTH O/A 49' 11" (12471mm)
DESIGN TEMP. – INT & EXT: 400°F(204°C)&400°F(204°C)	CAPACITY: 1951.3ft^3 (55.256 m^3)
MDMT: −50°F @ 196psi (−46°C @ 1351kPa)	SURFACE AREA: --ft^2 (-- m^2)
XRAY SHELL LONG: FULL UW-51 CIRC: FULL UW-51	HEAD TYPE: 2:1 SEMI-ELLIPTICAL
XRAY HEAD LONG: N/A CIRC: FULL UW-51	HEAD MATERIAL: SA-516-70N
JOINT EFF. – HEAD: 1.00 SHELL: 1.00	HEAD THICKNESS: 0.75"NOM 0.616"MIN (15.6mm)
JOINT EFF. – STEAM COIL: 0.85	HEAD CORROSION ALLOWANCE: 0.125" (3.18mm)
STRESS RELIEVED: 60 MIN @ 1150°F (621°C)	SHELL MATERIAL: SA-516 -70N
HYDRO TEST NEW & COLD: 255psi(1758kPa) LIMITED BY: HEAD	SHELL THICKNESS: 0.750 (19.05mm)
	SHELL CORROSION ALLOWANCE: 0.125" (3.18mm)
EST. SHIPPING WEIGHT: 34577lb(15683kg)	STUDS: SA-320-L7M
EST. HYDRO TEST WEIGHT: 156903lb(71170kg)	NUTS: SA-194-L7M
SANDBLAST: --	MW GASKETS: FLEXITALIC 304-SS
PRIMER: --	FLANGES: SA-350-LF2 CL1 PIPE: SA-333-GR6
PAINT: --	SUPPORT MTL: SA-516-70N
IMPACT TEST #: YES (SEE GENERAL NOTES BELOW)	REINFORCING MTL: SA-516-70N
CRN: U6813.2	REG DRAWING 08-041-1 REV.1

STEAM COIL DESIGN DATA – IMPERIAL (METRIC) UNITS

ASME SEC. VIII DIV 1, 2007 EDITION, 2009 ADDENDA

DESIGN INT: 200psi(1379 kPa) EXT: 196psi 135kPa)	MAWP INT: 200psi(1379 kPa) EXT:196psi(1351kPa)
DESIGN TEMP.INT & EXT: 400°F(204°C)& 400°F(204°C)	PWHT: 1HR @ 1150° F (621°C)
MDMT: −20°F(−29°C) @ 200PSI (1379kPa)	RT: NONE HYDRO TEST: 260psi (1792kPa)
PIPE MATERIAL: SA 333-GR.6	NO. OF COURSES: 10
PIPE THICKNESS: 0.344" (8.7mm)	PIPE INNER CORROSION ALLOWANCE: NIL
PIPE O.D.: 2.375" (60.3mm)	PIPE OUTER CORROSION ALLOWANCE: 0.125"(3.18mm)

ITEM	LOCATION	QTY	UM	DESCRIPTION
50	N11A/B	2.0	FT	PIPE 2" SCH XXH SMLS SA 333-GR.6 2 PCS 12" LG
49	N11A/B	4	EA	FLG 2" x CL150 SCH XXH RF WN SA 350-LF2 CL1
48	EXT. PAD	0.9	F2	PLATE .500" SA 516-70N 1 PC 12" X 8"
47	EXT. PAD	1.0	F2	PLATE .500" SA 516-70N 2 PCS 10" X 4"
46	EXT. PAD	6.5	F2	PLATE .500" SA 516-70N 6 PCS 14" X 8"
45	BLDG. RING	3.2	F2	PLATE .375" SA 516-70N 2" X 230" 48-3/4" ID
44	INT. CLIP	0.3	F2	PLATE .375" SA 516-70N 1 PC 6" x 4"
43	WEIR	35.2	F2	PLATE .375" SA 516-70N 48" R X 36" H
42	STEAM COIL	4	EA	UBOLT 2" NPS x 3/8" W/NUTS
41	STEAM COIL	1.9	F2	PLATE .375" SA 516-70N 18 PCS 3" x 5"
40	STEAM COIL	3.2	F2	PLATE .375" SA 516-70N 18 PCS 3" x 8-7/16"
39	STEAM COIL	88	EA	NUT HEX 5/8" NC SA 194-L7M
38	STEAM COIL	44	EA	STUD 5/8" NC x 3-1/4" LG SA 320-L7M
37	STEAM COIL	11	EA	GASKET FLEXITALIC 2" RF CL150 304-SS
36	STEAM COIL	20	EA	FLG 2" x CL150 RFSO SA 350-LF2 CL1
35	STEAM COIL	4	EA	ELBOW 2" SCH 160 LR SA 420-GRWPL6
34	STEAM COIL	1.9	FT	PIPE 2" SCH 160 SMLS SA 333-GR6 2 PCS 10-1/2" LG
33	STEAM COIL	4.9	FT	PIPE 2" SCH 160 SMLS SA 333-GR6 2 PCS 28-1/2" LG
32	STEAM COIL	48	FT	PIPE 2" SCH 160 SMLS SA 333-GR6 6 PCS 95" LG
31	STEAM COIL	6.75	FT	PIPE 2" SCH 160 SMLS SA 333-GR6 1 PC 80-1/2" LG
30	STEAM COIL	5.75	FT	PIPE 2" SCH 160 SMLS SA 333-GR6 1 PC 68-1/2" LG
29	STEAM COIL	2.6	FT	PIPE 2" SCH 160 SMLS SA 333-GR6 1 PC 31" LG
28	STEAM COIL	0.25	FT	PIPE 2" SCH 160 SMLS SA 333-GR6 1 PC 3" LG
27	C2B/3A/4A/4B/5B	5	EA	CPLG FULL 3/4" NPT X6" 6000# SA350LF2 CL1
26	C2A/3B/5B	3	EA	CPLG FULL 3/4" NPT X 8" 6000# SA350LF2 CL1
25	C1	1	EA	CPLG FULL 1/2" NPT X 4" 6000# SA350LF2 CL1
24	N8A/8B	3.4	FT	PIPE 2" SCH XXS SMLS SA 333-GR6 2 PCS 20" LG
23	N8A/8B	2	EA	FLG 2" x CL150 RFSO SA 350-LF2 CL1
22	N8A/8B	2	EA	FLG 2" x CL150 RFWN SCH XXS SA 350-LF2 CL1
21	N7	1	EA	FVC 3" x CL150 LWN x 9" SA 350-LF2 CL1
20	N6	1	EA	FVC 3" x CL150 LWN x 12" SA 350-LF2 CL1
19	N5	1	EA	FVC 3" x CL150 LWN x 9" SA 350-LF2 CL1
18	N4,N9,N10	3	EA	FVC 3" x CL150 LWN x 9" SA 350-LF2 CL1
17	N3	1	EA	FVC 4" x CL150 LWN x 9" SA 350-LF2 CL1
16	N2	1	EA	FLG 4" x CL150 RFSO SA 350-LF2 CL1
15	N2	1	EA	FVC 4" x CL150 LWN x 12" SA 350-LF2 CL1
14	N1	1	EA	FVC 4" x CL150 LWN x 12" SA 350-LF2 CL1
13	M1,M2	2	EA	GASKET FLEXITALIC 20" RF CL150 304-SS
12	M1,M2	80	EA	NUT HEX 1-1/8" 8TPI SA 194-L7M
11	M1,M2	40	EA	STUD 1-1/8" NC x 6-1/4" LG 8TPI SA 320-L7M
10	M1,M2 DAVIT	2	EA	DAVIT 20" CL150 SIDE MT
9	M1,M2	2	EA	FLG BLIND 20" CL150 RF SA 350-LF2 CL1
8	M1,M2	2	EA	FVC 20" x CL150 HB X 14" SA 350-LF2 CL1
7	-	--	--	-
6	DATA PLATE	1	EA	PL DATA UNITS MET/IMP EXTENDED VERSION
5	SADDLE	1	EA	SADDLE DETAIL FOR PRODUCTION TESTING TANK 97-3/4" OD X 19-7/8" HG
4	SADDLE PAD	16.1	F2	PL 0.500" SA 518-70N 2 PCS 96-1/4" x 10"
3	SHELL	2	EA	PL 0.750" SA 516-70N IMP TEST -50F 2 PCS 96" ID X 8' 0"
2	SHELL	2	EA	PL 0.750" SA 516-70N IMP TEST -50F 2 PCS 96" ID X 10' 0"
1	HEAD	2	EA	HD 2:1SE 96"ID X 0.616"MIN 2SF SA 516-70N IMP -50F

GENERAL NOTES:

1. QUALITY CONTROL NUMBER: AQP-1434(S)
2. WELDING PROCEDURE REGISTRATION NUMBER: WP 2081.2
3. SHELL AND HEAD MATERIAL: SA 516-70N
4. FLANGE AND COUPLING MATERIAL: SA 350-LF2 CL1
5. PIPE MATERIAL: SA 333 GR6
6. REPAD AND SADDLE PAD MATERIAL: SA 516-70N
7. SADDLE WEBS AND BASE MATERIAL: SA 36-44W
8. STUDS AND NUTS MATERIAL: SA 194-L7M & SA 320-L7M
9. ALL FLANGE BOLT HOLES TO STRADDLE CENTERLINE.
10. ALL EXTERNAL NOZZLE PROJECTIONS TO BE MEASURED ALONG THE SHORTEST SIDE OF NOZZLE.
11. ALL INTERNAL NOZZLE PROJECTIONS TO BE MEASURED ALONG THE SHORTEST SIDE OF NOZZLE
12. NOZZLES, FLANGES, ETC EXEMPT FROM PRODUCTION TESTING PER UCS-66 (g)
13. INTERNAL CONNECTIONS TO BE ROUNDED TO 1/8" RADIUS.
14. ALL REPAD AND SADDLE PADS TO BE ROUNDED TO 1" RADIUS MINIMUM.
15. MEASUREMENT TOLERANCES ARE 1/16" (UNLESS SPECIFIED OTHER)
16. ALL ATTACHMENT AND TACK WELDS WILL BE WELD PROCEDURE TOS-02
17. ALL NOZZLE FLANGES CAN BE SUBSTITUTED RFSO AND RFWN, USING APPROVED WELD PROCEDURES.
18. PLATE MATERIALS (SHELLS AND HEADS) PRODUCTION IMPACT TESTS (-50° F) PER UG-84.
19. CORROSION ALLOWANCE ON NOZZLES AND PIPE IS 1/8".

NOTE: All dimensions are IMPERIAL measurements (unless stated otherwise).

NOZZLE SCHEDULE

M1	1	MANWAY	SA-350 LF2 CL1	SA-350 LF2 CL1	-	20	FVC	HB	150#	23.19	1.595	5	.375	0.375	-	2.25	8.0
M2	1	MANWAY	SA-350 LF2 CL1	SA-350 LF2 CL1	-	20	FVC	HB	150#	23.19	1.595	5	.375	0.375	-	2.25	8.0
N1	1	INLET	SA-350 LF2 CL1	SA-350 LF2 CL1	--	4	FVC	LWN	150#	5.50	0.75	5	.375	0.0	-	6.0	6.0
N2	1	OUTLET	SA-350 LF2 CL1	SA-350 LF2 CL1	--	4	FVC	LWN	150#	5.50	0.75	5,11	.375	0.0	-	6.0	6.0
N3	1	DRAIN	SA-350 LF2 CL1	SA-350 LF2 CL1	--	4	FVC	LWN	150#	5.50	0.75	6	.375	0.0	-	0.0	5.25
N4	1	DRAIN	SA-350 LF2 CL1	SA-350 LF2 CL1	--	3	FVC	LWN	150#	4.25	0.625	6	.500	0.0	-	0.0	5.0
N5	1	DUMP	SA-350 LF2 CL1	SA-350 LF2 CL1	--	3	FVC	LWN	150#	4.25	0.625	5	.500	0.0	-	2.0	6.5
N6	1	DUMP	SA-350 LF2 CL1	SA-350 LF2 CL1	--	3	FVC	LWN	150#	4.25	0.625	5	.500	0.0	-	2.0	7.0
N7	1	PSV	SA-350 LF2 CL1	SA-350 LF2 CL1	--	3	FVC	LWN	150#	4.25	0.625	5	.500	0.0	-	2.0	7.0
N8A	1	STEAM COIL	SA-333 GR.6	SA-350 LF2 CL1	--	2	RFWN	XXS	150#	2.375	0.436	4,5,11	.500	0.50	-	6.0	6.0
[illegible]	1	STEAM COIL	SA-333 GR.6	SA-350 LF2 CL1	--	2	RFWN	XXS	150#	2.375	0.436	4,5,11	.500	0.50	-	6.0	6.0
[illegible]	1	DRAIN	SA-350 LF2 CL1	SA-350 LF2 CL1	--	3	FVC	LWN	150#	4.25	0.625	6	.500	0.0	-	0.0	5.0
N10	1	DRAIN	SA-350 LF2 CL1	SA-350 LF2 CL1	--	3	FVC	LWN	150#	4.25	0.625	6	.500	0.0	-	0.0	5.0
N11A	1	SPARGE	SA-333 GR.6	SA-350 LF2 CL1	--	2	RFWN	XXS	150#	2.375	0.436	4,5	.500	0.50	-	11.75	6.0
N11B	1	SPARGE	SA-333 GR.6	SA-350 LF2 CL1	--	2	RFWN	XXS	150#	2.375	0.436	4,5	.500	0.50	-	11.75	6.0
C1	1	CONTROL	SA-350 LF2 CL1	--	--	1/2"	CPLG	-	6000#	1.50	0.350	9	.500	0.0	-	2.0	2.0
C2A-3B	2	LG	SA-350 LF2 CL1	--	--	3/4"	CPLG	-	6000#	1.75	0.350	9	.500	0.0	-	2.0	2.0
C2B-3A	2	LG	SA-350 LF2 CL1	--	--	3/4"	CPLG	-	6000#	1.75	0.350	9	.500	0.0	-	2.0	2.0
C4A-4B	2	LG	SA-350 LF2 CL1	--	--	3/4"	CPLG	-	6000#	1.75	0.350	9	.375	0.0	-	2.0	2.0
C5A	1	LG	SA-350 LF2 CL1	--	--	3/4"	CPLG	-	6000#	1.75	0.350	9	.500	0.0	-	2.0	2.0
C5B	1	LG	SA-350 LF2 CL1	--	--	3/4"	CPLG	-	6000#	1.75	0.350	9	.625	0.625	-	2.0	2.0

WELD DETAILS

WELD DETAIL NUMBER	REGISTERED WELDING PROCEDURE NUMBER: ROOT	HOT PASS	FILL & CAP	BACKWELD/GOUGE
1,2,4	TOS-12N	TOS-12N/15N	TOS-12N/15N	TOS-12N
4,5,6,7,8	TOS-12N	TOS-12N	TOS-12N	N/A
9,11,12,13	TOS-12N	TOS-12N	TOS-12N	N/A

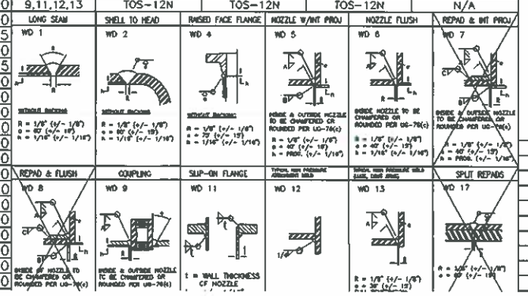

TOS-2 = SMAW
TOS-12N = GMAW SMAW SAW
TOS-15N = GMAW FCAW SAW

-	--	-	-	-	--
-	--	-	-	-	--
-	--	-	-	-	--
-	--	-	-	-	--
-	--	-	-	-	--
-	--	-	-	-	--
-	--	-	-	-	--
-	--	-	-	-	--
-	--	-	-	-	--
-	--	-	-	-	--
1	02/08/11	ADDED N11A/11B	LD	MS	--

TARA OILFIELD
TARA OILFIELD SERVICES LTD.
PHONE: 403-335-9158 FAX: 403-335-3403
1805 – 19th STREET DIDSBURY, ALBERTA

PRODUCTION TESTING VESSEL
96" I.D. x 36' SEAM/SEAM
196 PSI (1351 kPa)

ST-03