LINE NUMBER DESIGNATION

6–AA–LS–10–ST–50H

- LINE SIZE
- PIPING CLASS
- SERVICE DESIGNATION
- LINE NUMBER
- HEAT TRACING CODE
- INSULATION CODE

PIPING CLASSES

PIPING SPEC.	SERVICE	ANSI CLASS
A	SWEET GAS, H.C. LIQUIDS, GL, FG, PP, ST, PR, LO, FW, SC, BF	150#
AA	LA, AD, LEAN SULFINOL, SULFINOL DRAINS	150#
AB	RICH SULFINOL, SG, H.C. LIQUIDS, HP & LP	150#
ABC	RICH SULFINOL, SG, H.C. LIQUIDS, HP & LP (LOWER TEMP. THAN AB)	150#
AC	RE, SWEET GAS, H.C. LIQUIDS, PR	150#
AC1	SWEET GAS, RE, ET, BU, PP	150#
AC2	SWEET GAS, RE, ET, BU, PP (LOWER TEMP. THAN AC1)	150#
AE	PW, AG, SW	150#
AG	CU	150#
ALP	SWEET OIL (THREADED)	150#
AP	SWEET GAS & H.C. LIQUIDS (SURFACE)	150#
APS	SG, H.C. LIQUIDS (SURFACE)	150#
AS	SU	150#
AT	SH, GH	150#
B	SWEET GAS, H.C. LIQUIDS, ST, BF, GL	300#
BA	LA OR LEAN SULFINOL	300#
BB	RA, OR RICH SULFINOL, SG, H.C. LIQUIDS	300#
BBC	RA, OR RICH SULFINOL, SG, H.C. LIQUIDS (LOWER TEMP. THAN BB)	300#
BC	RE, ET, BU, PP, SWEET GAS, H.C. LIQUIDS	300#
BC1	SWEET GAS, RE, ET, BU, PP	300#
BC2	SWEET GAS, RE, ET, BU, PP (LOWER TEMP. THAN BC1)	300#
BE	PW, AG, SW	300#
BLP	SWEET OIL (THREADED)	300#
BP	SWEET GAS, H.C. LIQUIDS (SURFACE)	300#
BPS	SG, H.C. LIQUIDS (SURFACE)	300#
C	SWEET GAS, H.C. LIQUIDS, ST, BF, GL	600#

PIPING CLASSES

PIPING SPEC.	SERVICE	ANSI CLASS
CA	LA OR LEAN SULFINOL	600#
CB	RA, OR RICH SULFINOL, SG, H.C. LIQUIDS	600#
CBC	RA, OR RICH SULFINOL, SG, H.C. LIQUIDS (LOWER TEMP. THAN CB)	600#
CC	RE, ET, BU, PP, SWEET GAS, H.C. LIQUIDS	600#
CC1	SWEET GAS, RE, ET, BU, PP	600#
CC2	SWEET GAS, RE, ET, BU, PP (LOWER TEMP. THAN BC1)	600#
CE	PW, AG, SW	600#
CLP	SWEET OIL (THREADED)	600#
CP	SWEET GAS, H.C. LIQUIDS (SURFACE)	600#
CPS	SG, H.C. LIQUIDS (SURFACE)	600#
D	SWEET GAS, H.C. LIQUIDS, ST, BF	900#
DB	SG, H.C. LIQUIDS	900#
DBC	SG, H.C. LIQUIDS (LOWER TEMP. THAN DB)	900#
DC	RE, ET, BU, PP, SWEET GAS, H.C. LIQUIDS	900#
DP	SWEET GAS, H.C. LIQUIDS, FR (SURFACE)	900#
DPC	SG, H.C. LIQUIDS (SURFACE)	900#
E	SWEET GAS, H.C. LIQUIDS, ST, BF	1500#
EB	SG, H.C. LIQUIDS	1500#
EBC	SG, H.C. LIQUIDS (LOWER TEMP. THAN EB)	1500#
EC	RE, ET, BU, PP, SWEET GAS, H.C. LIQUIDS	1500#
EP	SWEET GAS, H.C. LIQUIDS, FR (SURFACE)	1500#
EPS	SG, H.C. LIQUIDS (SURFACE)	1500#
F	SWEET GAS, H.C. LIQUIDS	2500#
FP	SWEET GAS, H.C. LIQUIDS, FR (SURFACE)	2500#
FPS	SG, H.C. LIQUIDS (SURFACE)	2500#
WA	WA, IA	150#
WU	UW, UA	150#
Z	SS	N/A

SERVICE DESIGNATIONS

SERVICE	DESIGNATION	SERVICE	DESIGNATION
2 PHASE	P	LIQUID SULFUR	SU
ACID GAS	AG	LUBE OIL (PICKLED)	LO
ACID GAS (SRU & TAIL GAS CLEAN UP)	CU	METHANOL	M
		NITROGEN	N
AMINE DRAIN	AD	POTABLE WATER	WA
BOILER FEED WATER	BF	PRESSURE RELIEF	PR
BUTANE	BU	PRODUCED EMULSION	PE
CAUSTIC	K	PRODUCED GAS	PG
CHASING GAS	CG	PRODUCED WATER	PW
CHEMICALS	CH	PROPANE	PP
CLOSED DRAIN	CD	REFRIGERANT	RE
COOLING WATER	CW	RELIEF	RF
DIESEL FUEL	DF	RICH AMINE	RA
ETHANE	ET	SALES OIL	SO
FIRE WATER	FW	SANITARY SEWER	SS
FRESH WATER	FR	SEAL OIL	SE
FUEL GAS	FG	SOUR (H2S) WATER	SW
GAS	G	SOUR GAS	SG
GLYCOL	GL	SOUR HYDROCARBON	SO
GLYCOL HEAT TRACING	GH	STEAM	ST
H.C. DRAIN	HD	STEAM CONDENSATE	SC
H.P. SOUR FLARE GAS	HP	STEAM HEAT TRACING	SH
HYDRAULIC	HY	SWEET HYDROCARBONS	SH
INJECTION WATER	IW	SWEET HYDROCARBONS (LIQ. & VAP.)	LV
INSTRUMENT AIR	IA		
INSTRUMENT GAS	IG	UTILITY AIR	UA
L.P. SOUR FLARE GAS	LP	UTILITY WATER	UW
LEAN AMINE	LA	VENT	V
LIQUID	L		

HEAT TRACING CODES

DESCRIPTION	CODE
STEAM TRACED	ST
GLYCOL TRACED	GT
STEAM JACKET	SJ
HOT OIL TRACED	OT
ELECTRIC TRACED	ET
NO TRACING	XX

INSULATION CODES

DESCRIPTION	CODE
(mm) HOT JACKETED	( )H
(mm) COLD	( )C
(mm) PERSONAL PROTECTION	( )PP
(mm) ACOUSTIC	( )A
NO INSULATION	XX

EQUIPMENT IDENTIFICATION

P–101

- EQUIPMENT IDENTIFIER
- SEQUENTIAL NUMBER

IDENTIFIER	EQUIPMENT	IDENTIFIER	EQUIPMENT
B	BUILDING	C	COMPRESSOR
D	DRYER	E	EXCHANGER
F	FILTER	MX	MIXER
G	GENERATOR	H	HEATER
SL	SCRAPER LAUNCHER	M	MISCELLANEOUS
P	PUMP	S	SUMP
T	TANK	V	PRESSURE VESSEL
SR	SCRAPER RECEIVER	SV	STORAGE VESSEL
X	ELECTRICAL	WH	WELLHEAD
IM	INLET MANIFOLD	CM	CENTRAL MANIFOLD
CI	CHEMICAL INJECTION	BO	STEAM BOILER
CT	COOLING TOWERS	BL	AIR BLOWER OR FAN
IN	INCINERATOR	RA	REACTORS OR CONVERTERS
FS	FLARE STACK	RO	RISTRICTION ORIFICE
DE	DIESEL ENGINE	GE	GAS ENGINE
SE	STEAM ENGINE		
GB	GEAR BOX		

SYMBOL LEGEND

GATE VALVE
BALL VALVE
NEEDLE VALVE
GLOBE VALVE
PLUG VALVE
CHECK VALVE
PISTON CHECK
WAFER CHECK
BUTTERFLY VALVE
THREE WAY VALVE
FOUR WAY VALVE
FLANGED VALVE
SCREWED VALVE
SOLENOID VALVE
CONTROL VALVE WITH DIAPHRAGM ACTUATOR
CONTROL VALVE WITH PISTON ACTUATOR
HAND CONTROL VALVE
ANGLE VALVE
RUPTURE DISC
PRESSURE SAFETY VALVE
PRESSURE–REDUCING REGULATOR, SELF–CONTAINED
BACK–PRESSURE REGULATOR, SELF–CONTAINED
ANGLE CHOKE VALVE
STEAM TRAP
INSULATION
HEAT TRACED LINE
ORIFICE FLANGES
ORIFICE PLATE QUICK CHANGE FITTING
POSITIVE DISPLACEMENT METER
TURBINE METER
VENTURI TUBE
JUNIOR/ SENIOR TYPE ORIFICE METER
MASS FLOW METER
ROTO METER
VORTEX METER
WEDGE METER
PITOT OR ANNUBAR METER
HEAT TRACED INSTRUMENT
UNION
INSTRUMENT AIR
INSTRUMENT GAS
SPECTACLE BLIND (CLOSED)
SPECTACLE BLIND (OPEN)
CONICAL SCREEN
Y–STRAINER (INLINE)
BASKET STRAINER
INSULATION KIT
BARRED TEE
CONCENTRIC REDUCER
ECCENTRIC REDUCER
TIE–IN CONNECTION (TO EXISTING)
FIELD WELD
SCREWED PLUG
BUTT WELD CAP
SCREWED CAP
HOSE CONNECTION
FLEXIBLE HOSE
EXPANSION JOINT
INLINE MIXER
FLAME ARRESTOR
STRAIGHTENING VANES
VORTEX BREAKER
DIAPHRAGM SEAL
OPEN DRAIN
SPECIALTY ITEM
MAIN PROCESS PIPING
SECONDARY PIPING
UTILITY PIPING
EXISTING PIPE & EQUIP.
FUTURE PIPE & EQUIP.
PACKAGE BOUNDARY LIMITS
VARIABLE FREQUENCY DRIVE
PLC
V–CONE FLOW METER
PIGGING VALVE
FLANGED GLOBE VALVE

COMMON ABBREVIATIONS

A/G	ABOVE GROUND	J	JOULES
APPD	APPROVED	LLL	LOW LIQUID LEVEL
AS	AIR SUPPLY	LP	LOW POINT
ASSY	ASSEMBLY	LPD	LOW POINT DRAIN
ATM	ATMOSPHERIC	LSD	LEGAL SUBDIVISION
BBE	BEVEL BOTH ENDS	MCC	MOTOR CONTROL CENTER
BBL	BARREL	MFS	MECHANICAL FLOWSHEET
BCD	BOLT CIRCLE DIAMETER	NC	NORMALLY CLOSED
BD	BLOWDOWN	NLL	NORMAL LIQUID LEVEL
BLD	BLIND	NO	NORMALLY OPEN
CC	CORROSION COUPON	NS	NITROGEN SUPPLY
CP	CORROSION PROBE	NSPC	NON–SLAM PISTON CHECK
CS	CARBON STEEL	NTS	NOT TO SCALE
CSC	CAR SEAL CLOSED	OD	OUTSIDE DIAMETER
CSO	CAR SEAL OPEN	O/S	OUTSIDE
c/w	COMPLETE WITH	PC	PURGE CONNECTION
DBB	DOUBLE BLOCK & BLEED	PD	POSITIVE DISPLACEMENT
DP	DESIGN PRESSURE	PFS	PROCESS FLOWSHEET
DT	DESIGN TEMPERATURE	P/L	PIPELINE
ES	ELECTRIC SUPPLY	PLC	PROGRAMMABLE LOGIC CONTROLLER
ET	ELECTRICAL TRACE	PP	PLOT PLAN
FC	FAIL CLOSE	PO	PUMP OUT
FLG	FLANGE	RF	RAISED FACE
FO	FAIL OPEN	FO	RESTRICTION ORIFICE
FP	FULL PORT	RP	REDUCED PORT
FS	FORGED STEEL	RTU	REMOTE TRANSMITING UNIT
FW	FIELD WELD	SC	SAMPLE CONNECTION
GO	GEAR OPERATED	S/D	SHUTDOWN
GS	GAS SUPPLY	SG	SPECIFIC GRAVITY
GT	GLYCOL TRACED	SMLS	SEAMLESS
HC	HOSE CONNECTION	SO	STEAM OUT
HLL	HIGH LIQUID LEVEL	SP	SET POINT
HP	HIGH POINT	SS	STAINLESS STEEL
HP	HORSE POWER	S/S	SEAM TO SEAM
HPV	HIGH POINT VENT	ST	SOUR TRIM
HS	HYDRAULIC SUPPLY	TK	TANK
HT	HEAT TRACED	TSO	TIGHT SHUT–OFF
IA	INSTRUMENT AIR	T/T	TANGENT TO TANGENT
IC	INTERNAL COMBUSTION	TW	THERMOWELL
ID	INSIDE DIAMETER	UA	UNIT ALARM
IG	INSTRUMENT GAS	U/G	UNDER GROUND
INJ. PT.	INJECTION POINT	UNO	UNLESS NOTED OTHERWISE
I/P	CURRENT TO PNEUMATIC	WS	WATER SUPPLY
I/S	INSIDE		

C:\Users\bum85137\Desktop\Drawings to PDF\DIL–W002–C–001–A.dwg bum85137 24/05/16 – 2:31 P

REFERENCE DRAWINGS

DRAWING No	TITLE

SPEC	
CODE	
RT	
PWHT	
HYDRO	
APPROVAL	
MAINTENANCE	
OPERATIONS	
ENGINEERING	

REVISION

REV No.	DATE (YY–MM–DD)	DESCRIPTION	DRAFTED BY	CHECKED BY	APPROVED BY
1	08–02–28	GENERAL REVISION (CONCISE PROJ. #2743.00)	CM		
0	07–12–13	ISSUED FOR CONSTRUCTION (CONCISE PROJ. #2743.00)	RSN		

PROFESSIONAL STAMP | PERMIT STAMP

DATE

nexen

DILLY CREEK PILOT DEVELOPMENT
P & ID LEGEND SHEET

BUS. UNIT	LOCATION	SCALE
GAS	a–27–I/94–O–8	NTS

EPC NAME	EPC DRAWING No.
CONCISE DESIGN	07–2743.00

NEXEN DWG No	SHEET No	REV
DIL–W002–C–001–A	1 OF 1	1

FILE NAME: DIL–W002–C–001–A.DWG

VALVE CODE NUMBERS

BA–623CF

- VALVE TYPE
- PRESSURE RATING (1 OR 2 DIGITS)
- VALVE TRIM MATERIAL AND/OR SERVICE
- SUFFIX
- TYPE OF END CONNECTION & VALVE OPERATOR

VALVE TYPE		PRESSURE RATINGS	
BA	BALL VALVE	1	ANSI CLASS 150#
BU	BUTTERFLY VALVE	3	ANSI CLASS 300#
CH	CHECK VALVE	6	ANSI CLASS 600#
DB	DOUBLE BLOCK & BLEED	8	API CLASS 800#
GA	GATE VALVE	9	ANSI CLASS 900#
GL	GLOBE VALVE	15	ANSI CLASS 1500#
NE	NEEDLE VALVE	25	ANSI CLASS 2500#
PL	PLUG VALVE	60	ANSI CLASS 6000#

VALVE SUFFIX:

F	FULL PORT VALVE
C	INTERNALLY COATED VALVE
CF	FULL PORT & INTERNALLY COATED VALVE

NOTE: ALL VALVE CODE NUMBERS FOR GATE VALVES 2 NPS AND LARGER SPECIFY FULL PORT. THEREFORE A SUFFIX "F" IS NOT REQUIRED.

VALVE TRIM MATERIALS AND/OR SERVICE

WARM TEMP. SERVICE (i.e. ABOVE −29°C)			COLD TEMP. SERVICE (i.e. ABOVE −45°C)			STEAM SERVICE	CRYOGENIC SERVICE		STAINLESS STEEL BODY WITH CORROSIVE TRIM
STANDARD TRIM	SOUR TRIM	CORROSIVE TRIM	LOW TEMP. TRIM	LOW TEMP. SOUR TRIM	LOW TEMP. CORROSIVE TRIM	STANDARD TRIM	ABOVE −101°C	ABOVE −184°C	
0	1	2	3	4	5	6	7	8	9

END CONNECTIONS AND VALVE OPERATOR

TYPE OF END CONNECTIONS	GATE, GLOBE, BALL, OR BUTTERFLY VALVES			CHECK VALVES					
	TYPE OF VALVE OPERATOR			TYPE OF CHECK					
	HANDWHEEL OR LEVER	GEAR OPERATOR	JACKETED	SWING	TILTING DISC	PISTON	BALL (HORIZ.)	BALL	WAFER
RAISED FACE FLANGES (RF)	0	1	J	0	1	2			X
RING JOINT FLANGES (RTJ)	2	3		3	4	5			
BUTT WELDING (BW)	4	5		S	T	P			
SOCKET WELDING (SW)	6						6	7 (SEE NOTE)	
SOCKET WELD x THREADED (SWxTH)	7								
THREADED (TH)	8						8	9	

NOTE: FOR ANSI CLASS 1500 AND 2500 CHECK VALVES, "7" DENOTES PISTON TYPE (HORIZONTAL FLOW).

INSTRUMENT FUNCTION BLOCKS & DESIGNATIONS

- Σ — SUMMING
- Σ/n — AVERAGING
- x — MULTIPLYING
- > — HIGH SELECT
- < — LOW SELECT
- I/P — CONVERT (OUTPUT SIGNAL IS DIFFERENT FROM INPUT)
- n√ — ROOT EXTRACTION

INSTRUMENT LINE SYMBOLS

- INSTRUMENT PNEUMATIC SIGNAL
- CAPILLARY TUBING
- ELECTRIC SIGNAL
- HYDRAULIC SIGNAL
- COMPUTER LINK

INSTRUMENT IDENTIFICATION EXAMPLES:

- LSH — A SINGLE DEVICE ON A PIECE OF EQUIPMENT SHALL BE LABELED WITH A SINGLE MODIFIER.
- LSHH — IF TWO OF THE SAME DEVICES APPEAR ON THE SAME PIECE OF EQUIPMENT, THE SECOND DEVICE SHALL BE LABELED WITH A DOUBLE MODIFIER.
- SDV — SHUTDOWN VALVE
- FV — FLOW VALVE
- LIGHT OR BEACON
- FT — FUNCTION BLOCK SYMBOL ASSOCIATED WITH INSTRUMENT

INSTRUMENT OR FUNCTION SYMBOLS

	PRIMARY LOCATION (NORMALLY ACCESSIBLE TO OPERATOR **)	FIELD MOUNTED	AUXILIARY LOCATION (NORMALLY ACCESSIBLE TO OPERATOR **)
DISCRETE INSTRUMENTS	*		*
SHARED DISPLAY, SHARED CONTROL	*		*
COMPUTER FUNCTION			
PROGRAMMABLE LOGIC CONTROL	*		*

* ABBREVIATIONS OF THE USER'S CHOICE SUCH AS IP1 (INSTRUMENT PANEL #1.), IC2 (INSTRUMENT CONSOLE #2.), CC3 (COMPUTER CONSOLE #3.), ETC., MAY BE USED WHEN IT IS NECESSARY TO SPECIFY INSTRUMENT OR FUNCTION LOCATION.

** NORMALLY INACCESSIBLE OR BEHIND THE PANEL DEVICES OR FUNCTIONS MAY BE DEPICTED BY USING THE SAME SYMBOLS BUT WITH DASHED HORIZONTAL BARS, i.e.

INSTRUMENT IDENTIFICATION LETTERS

IDENTIFIER	INSTRUMENT	IDENTIFIER	INSTRUMENT	IDENTIFIER	INSTRUMENT	IDENTIFIER	INSTRUMENT	IDENTIFIER	INSTRUMENT	IDENTIFIER	INSTRUMENT	IDENTIFIER	INSTRUMENT
A/D	ANALOG TO DIGITAL	FE	FLOW ELEMENT	ILCV	INTERFACE LEVEL CONTROL VALVE	MR	METER	PV	PRESSURE VALVE	TIC	TEMPERATURE INDICATING CONTROLLER	XCY	CONTROL RELAY
AAH	ANALYZER ALARM HIGH	FFY	SIGNAL MULTIPLIER DIVIDER	ILG	INTERFACE LEVEL GAUGE	MS	MANUAL SET POINT STATION	PXR	PRESSURE DATA LOGGER	TR	TEMPERATURE RECORDER	XDI	DEWPOINT INDICATOR
AE	ANALYZER ELEMENT	FI	FLOW INDICATOR	ILIC	INTERFACE LEVEL INDICATING CONTROLLER	MSS	MANUAL SELECTOR STATION	PY	PRESSURE RELAY	TRC	TEMPERATURE RECORDER CONTROLLER	XDV	DELUGE VALVE
AI	ANALYZER INDICATOR	FIC	FLOW INDICATING CONTROLLER	ILT	INTERFACE LEVEL CONTROLLER	MT	MOISTURE TRANSMITTER	PYH	PRESSURE RELAY HIGH	TS	TEMPERATURE SWITCH	XFA	FLOW ADDER
AOV	AIR OPERATED VALVE	FIS	FLOW INDICATING SWITCH	IT	CURRENT INDICATOR	MX	MIXER	PYL	PRESSURE RELAY LOW	TSH	TEMPERATURE SWITCH HIGH	XFC	FLOW COMPUTER
ASH	ANALYZER SWITCH HIGH	FPTR	FLOW, PRESSURE, TEMP RECORDER(3 PEN)	LA	LEVEL ALARM	NOC	NET OIL COMPUTER	QC	QUALITY CONTROLLER	TSL	TEMPERATURE SWITCH LOW	XFRC	FLOW RATIO CONTROLLER
AT	ANALYZER TRANSMITTER	FQI	FLOW INDICATING TOTALIZER	LAH	LEVEL ALARM HIGH	P/E	PNEUMATIC TO ELECTRICAL TRANSDUCER OR SWITCH	QCA	QUALITY CONTROL ALARM	TT	TEMPERATURE TRANSMITTER	XFT	FLOW TOTALIZER
AY	ELECTRICAL RELAY	FQXR	FLOW TOTALIZER DATA LOGGER	LAHL	LEVEL ALARM HIGH–LOW	P/I	PNEUMATIC TO CURRENT TRANSDUCER	QCI	QUALITY CONTROL INDICATOR	TV	TEMPERATURE VALVE	XGD	HAZARDOUS GAS DETECTOR
BAL	BURNER ALARM LOW	FR	FLOW RECORDER	LAL	LEVEL ALARM LOW	PA	PRESSURE ALARM	RC	TIME CONTROLLER	TW	THERMOWELL	XI	RUNNING LIGHT
BAO	BURNER ALARM OFF	FRC	FLOW RECORDER CONTROLLER	LC	LEVEL CONTROLLER	PAH	PRESSURE ALARM HIGH	RO	RESTRICTION ORIFICE	TXR	TEMPERATURE DATA LOGGER	XPA	PIG OR SPHERE DETECTOR
BE	BURNER FLAME ELEMENT	FRRC	FLOW RATIO RECORDER CONTROLLER	LCV	LEVEL CONTROL VALVE	PAL	PRESSURE ALARM LOW	RTD	RESISTANCE TEMPERATURE DETECTOR	TY	TEMPERATURE RELAY	XPSU	POWER SUPPLY UNIT
BFO	BURNER FLAME OFF	FS	FLOW SWITCH	LG	LEVEL GAUGE	PB	PUSH BUTTON	RTU	REMOTE TERMINAL UNIT	UA	COMMON UNIT ALARM	XRG	RAMP GENERATOR
BSO	BURNER SWITCH LOW	FSH	FLOW SWITCH HIGH	LI	LEVEL INDICATOR	PC	PRESSURE CONTROLLER	SAH	OVERSPEED ALARM	UXR	COMMON UNIT ALARM TO DATA LOGGER	XRRS	REVERSE ROTATION SWITCH
BSW	BASIC SEDIMENT AND WATER	FSL	FLOW SWITCH LOW	LIC	LEVEL INDICATING CONTROLLER	PCV	PRESSURE CONTROL VALVE	SC	SPEED CONTROLLER	VAH	VIBRATION ALARM HIGH	XRY	RATIO RELAY
CC	CORROSION COUPON	FT	FLOW TRANSMITTER	LR	LEVEL RECORDER	PDC	PRESSURE DIFFERENTIAL CONTROLLER	SDV	SHUTDOWN VALVE	VAH	VIBRATION SWITCH HIGH	XSPI	SPHERE PASSAGE INDICATOR
CD	CONTINUOUS DRAINER	FV	FLOW VALVE	LRC	LEVEL RECORDER CONTROLLER	PDCV	PRESSURE DIFFERENTIAL CONTROL VALVE	SDY	SOLENOID VALVE OR PILOT VALVE	VB	VOLTAGE BALANCE	XSS	SPHERE PASSAGE SWITCH
CN	CHOKE NIPPLE	FXR	FLOW DATA LOGGER	LS	LEVEL SWITCH	PDI	PRESSURE DIFFERENTIAL INDICATOR	SI	SPEED INDICATOR	VE	VIBRATION SENSOR	XSYH	SELECTOR RELAY HIGH
CP	CORROSION PROBE	FY	FLOW RELAY	LSH	LEVEL SWITCH HIGH	PDIC	PRESSURE DIFFERENTIAL INDICATOR CONTROLLER	SPL	PRESSURE SWITCH LOW	VI	VIBRATION INDICATOR	XSYL	SELECTOR RELAY LOW
CVA	CHOKE VALVE ADJUSTABLE	FYL	FLOW RELAY LOW	LSHL	LEVEL SWITCH HIGH–LOW	PDSH	PRESSURE DIFFERENTIAL SWITCH HIGH	SR	SPEED RECORDER	VPSV	VACUUM PRESSURE SAFETY VALVE	XTC	TEMPERATURE CONVERTER
CVC	CHOKE VALVE CONTROL	GA	GAS ANALYZER	LSL	LEVEL SWITCH LOW	PDSL	PRESSURE DIFFERENTIAL SWITCH LOW	SS	SPEED SWITCH	VR	VOLTAGE REGULATOR	XTP	TICKET PRINTER
CVP	CHOKE VALVE POSITIVE	GAI	GAS ANALYZER INDICATOR	LT	LEVEL TRANSMITTER	PDT	PRESSURE DIFFERENTIAL TRANSMITTER	SSV	SURFACE SAFETY VALVE	VS	VIBRATION SWITCH	XVB	VOLUME BOOSTER
DE	DENSITY ELEMENT	H2A	HYDROGEN ALARM	LV	LEVEL VALVE	PI	PRESSURE INDICATOR	ST	SPEED TRANSMITTER	VT	VIBRATION PREAMP/TRANSMITTER	XVPI	VALVE POSITION INDICATOR
DR	DENSITY RECORDER	H2T	HYDROGEN TRANSMITTER	LXR	LEVEL DATA LOGGER	PIC	PRESSURE INDICATING CONTROLLER	ST	STRAINER	WHS	WELLHEAD START–STOP PUSHBUTTON	XVPS	VALVE POSITION SWITCH
EL	VOLTAGE INDICATOR	HCV	HAND CONTROL VALVE	LY	LEVEL RELAY	PR	PRESSURE RECORDER	TA	TEMPERATURE ALARM	XA	COMMON UNIT SHUTDOWN ALARM	XXR	COMMON UNIT SHUTDOWN ALARM TO DATA LOGGER
ESD	EMERGENCY SHUTDOWN SWITCH	HE	HEATING ELEMENT	M/A	MANUAL AUTOMATIC SYSTEM	PRC	PRESSURE RECORDER CONTROLLER	TAH	TEMPERATURE ALARM HIGH	XAC	ANALOG COMPUTER	ZSC	POSITION SWITCH CLOSED
FA	FLOW ALARM	HOA	HAND–OFF AUTOMATIC	MA	MOISTURE ANALYZER	PS	PRESSURE SWITCH	TAL	TEMPERATURE ALARM LOW	XAY	AUTO–SELECT RELAY	ZSO	POSITION SWITCH OPEN
FAH	FLOW ALARM HIGH	HS	HAND SWITCH	MAA	MOISTURE ANALYZER ALARM	PSH	PRESSURE SWITCH HIGH	TC	TEMPERATURE CONTROLLER	XB	BEACON LIGHT	ZIC	POSITION INDICATION CLOSED
FAL	FLOW ALARM LOW	I/S	CURRENT TO SWITCH TRANSDUCER	MCVI	MOTOR CONTROLLED VALVE INDICATOR	PSHL	PRESSURE SWITCH HIGH–LOW	TCV	TEMPERATURE CONTROL VALVE	XBA	BEACON ALARM	ZIO	POSITION INDICATION OPEN
FC	FLOW CONTROLLER	I/P	CURRENT TO PNEUMATIC TRANSDUCER	MLS	MANUAL LOADING STATION	PSV	PRESSURE SAFETY VALVE	TE	TEMPERATURE ELEMENT	XC	CONVERTER		
FCV	FLOW CONTROL VALVE	ILC	INTERFACE LEVEL CONTROL	MOV	MOTOR OPERATED VALVE	PT	PRESSURE TRANSMITTER	TI	TEMPERATURE INDICATOR	XCM	CORROSION METER		

NOTE:
1. FOR FURTHER DETAILS OF INSTRUMENT SYMBOLS AND IDENTIFICATION REFER TO ANSI/ISA–S5.1–1984.

REFERENCE DRAWINGS

DRAWING No	TITLE

APPROVAL	
SPEC	
CODE	
RT	
PWHT	
HYDRO	
MAINTENANCE	
OPERATIONS	
ENGINEERING	

REVISION

REV No.	DATE (YY–MM–DD)	DESCRIPTION	DRAFTED BY	CHECKED BY	APPROVED BY
1	08–02–28	GENERAL REVISION (CONCISE PROJ. #2743.00)	CM		
0	07–12–13	ISSUED FOR CONSTRUCTION (CONCISE PROJ. #2743.00)	RSN		

PROFESSIONAL STAMP | PERMIT STAMP

DATE

nexen

DILLY CREEK PILOT DEVELOPMENT
P & ID LEGEND SHEET

BUS. UNIT	LOCATION	SCALE
GAS	a–27–I/94–0–8	NTS

EPC NAME	EPC DRAWING No.
CONCISE DESIGN	07–2743.00

NEXEN DWG No	SHEET No	REV
DIL–W002–C–002–A	1 OF 1	1

FILE NAME: DIL–W002–C–002–A.DWG

C:\Users\bum85137\Desktop\Drawings to PDF\DIL–W002–C–002–A.dwg bum85137 24/05/16 – 2:31 P

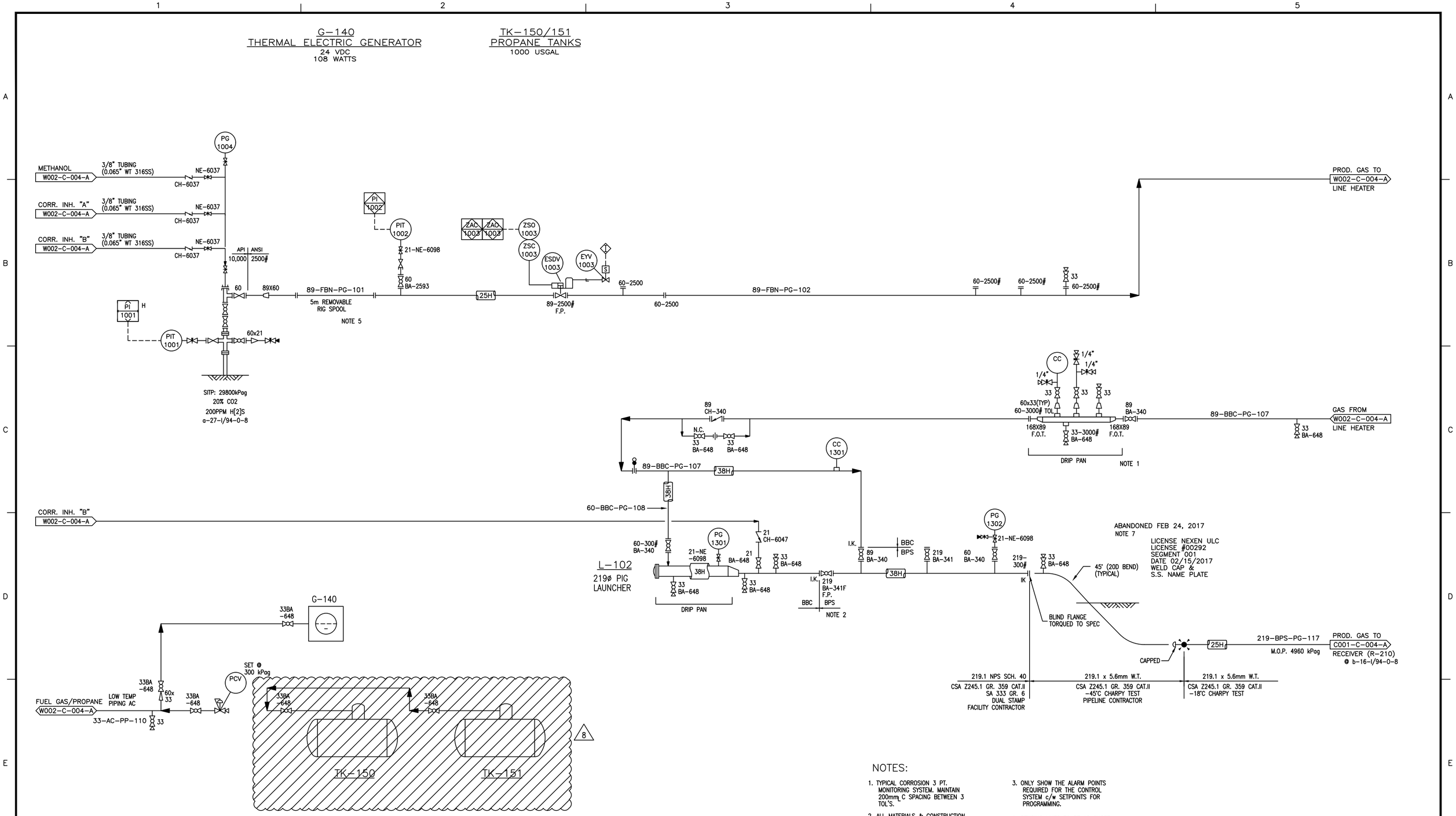

NOTES:

1. TYPICAL CORROSION 3 PT. MONITORING SYSTEM. MAINTAIN 200mm C SPACING BETWEEN 3 TOL'S.
2. ALL MATERIALS & CONSTRUCTION SHALL COMPLY WITH CSA Z662 LATEST EDITION AND NEXEN PIPING CLASS AS LISTED.
3. ONLY SHOW THE ALARM POINTS REQUIRED FOR THE CONTROL SYSTEM c/w SETPOINTS FOR PROGRAMMING.
4. SENSING LINES TO BE AS SHORT AS PRACTICAL.
5. USE 5D SWEEPS UPSTREAM OF ESDV-1003.
6. ALL TAGS ON P&ID ARE PREFACED WITH DILA27I.
7. WORLEYPARSONS PROVIDED ENGINEERING AND DRAFTING SERVICES, FIELD WORK WAS NOT WORLEYPARSONS SCOPE.

PROJECT REVISION

REV No	DATE (YYYY-MM-DD)	DESCRIPTION	DRAFTED BY	CHECKED BY	APPROVED BY

REFERENCE DRAWINGS

DRAWING No	TITLE

NEXEN REVISION / APPROVAL

REV No	DATE (YYYY-MM-DD)	DESCRIPTION	DRAFTED BY	CHECKED BY	APPROVED BY
7	17-05-08	AS-BUILT	GMC	DH	DH
6	12-12-28	AS-BUILT (NEXEN)	DAH		
5	11-03-25	AS BUILT (NEXEN SPI IIP-0002)	DEP	FJ	DW
4	10-09-24	REVISED AS PER MOC NEBC 2009-039 (NEXEN)	DEP	RK	
3	09-03-19	AS-BUILT (CONCISE PROJ. #2743.00)	DI		
2	08-02-28	GENERAL REVISION (CONCISE PROJ. #2743.00)	CM		
1	08-02-05	RE-ISSUED FOR CONSTRUCTION (CONCISE PROJ. #2743.00)	DG		
0	07-12-13	ISSUED FOR CONSTRUCTION (CONCISE PROJ. #2743.00)	RSN	AM	
8	2018-02-22	AS-BUILT (NEBC-2017-000613) (NEXEN)	AM	AM	

PROFESSIONAL STAMP | PERMIT STAMP

DATE

nexen
A CNOOC LIMITED COMPANY

DILLY CREEK PILOT DEVELOPMENT
WELLSITE a-27-I/94-0-8
PIPING & INSTRUMENTATION DIAGRAM

PROJECT NUMBER	LOCATION	SCALE
17PR001	a-27-I/94-0-8	NTS

EPC NAME	EPC DRAWING No.
WORLEYPARSONS	DIL-W002-C-003-A

NEXEN DWG No	SHEET No	REV
DIL-W002-C-003-A	1 OF 1	8

LAST SAVED: 2/22/2018 8:19:00 AM BY: MOULDERA
PLOTTED: 2/22/2018 8:22:15 AM, BY: MOULDER, ANDREW (CALGARY)

FILENAME: C:\USERS\MOULDERA\DESKTOP\DRAFTING\DIL-W002-C-003-A.DWG

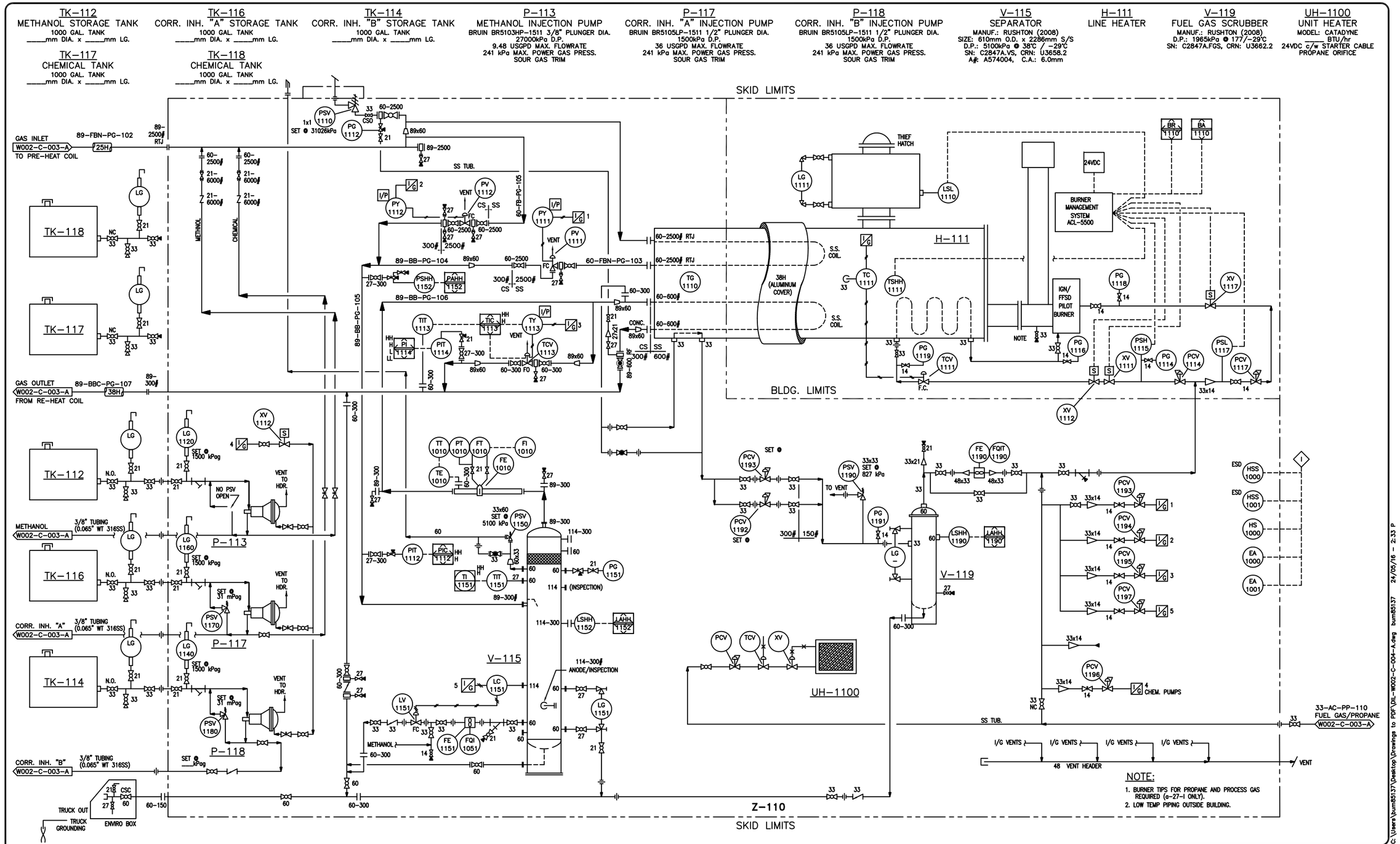

REFERENCE DRAWINGS	
DRAWING No	TITLE

SPEC	
CODE	
RT	
PWHT	
HYDRO	
APPROVAL	
MAINTENANCE	
OPERATIONS	
ENGINEERING	

REVISION				APPROVAL		
REV No.	DATE (YY-MM-DD)	DESCRIPTION		DRAFTED BY	CHECKED BY	APPROVED BY
5	12-12-28	AS-BUILT (NEXEN)		DAH		
4	11-02-02	AS BUILT (NEXEN SPI 11P-0002)		DEP	FJ	DWW
3	09-03-19	AS-BUILT (CONCISE PROJ. #2743.00)		DI		
2	08-02-28	GENERAL REVISION (CONCISE PROJ. #2743.00)		CM		
1	08-02-05	RE-ISSUED FOR CONSTRUCTION (CONCISE PROJ. #2743.00)		DG		
0	07-12-13	ISSUED FOR CONSTRUCTION (CONCISE PROJ. #2743.00)		RSN		

PROFESSIONAL STAMP | PERMIT STAMP

DATE

nexen

DILLY CREEK PILOT DEVELOPMENT
LINE HEATER (Z-110)
PIPING & INSTRUMENTATION DIAGRAM

BUS. UNIT	LOCATION	SCALE
GAS	a-27-I/94-O-8	NTS
EPC NAME: NEXEN	EPC DRAWING No.	
NEXEN DWG No: DIL-W002-C-004-A	SHEET No: 1 OF 1	REV: 5

FILE NAME: DIL-W002-C-004-A.DWG

C:\Users\bum85137\Desktop\Drawings to PDF\DIL-W002-C-004-A.dwg bum85137 24/05/16 - 2:33 P

nexen

Facility: **WELLSITE**
Area: **DILLY CREEK PILOT DEVELOPMENT**
LSD: **a-27-I/94-O-8**
Title: **PIPING LINE LIST**
EPC Co.: **Concise Design**
EPC Co. No.:

Revision	No.	Date	Appr.	EPC Co.
GENERAL REVISION (CONCISE PROJ. #2743.00)	2	08-02-28		CONCISE
RE-ISSUED FOR CONSTRUCTION (CONCISE PROJ. #2743.00)	1	08-02-05		CONCISE
ISSUED FOR CONSTRUCTION (CONCISE PROJ. #2743.00)	0	07-12-13		CONCISE

1. PWHT FOR STAINLESS STEEL AS REQUIRED BY WELDING PROCEDURES AND ASME B31.3

LINE IDENTIFICATION									LINE INFORMATION					DESIGN INFORMATION								GENERAL INFORMATION		
Line Number									Operating				Pipe	Design	Design	Min.	Max.	Test	Test	X-ray	PWHT	Line	Comments	Drawing
Size	Pipe Class	Service	Line No.	Trace Type	Insul Thk.	Insul Code	From (Beginning of the Line)	To (End of the Line)	Press. kPa	Temp. °C	Paint Sys.	Internal Coating	Sch.	Press. kPa	Temp. °C	Temp. °C	Temp. °C	Press. kPa	Medium	%		Rev.	Notes	Number
89	FBN	PG	101		25	H	WELLHEAD @a-27-I/94-O-8	ESDV 1003	1200	20			160	31000	38	-45	38	46500	WATER	100	NOTE 1	2		DIL-W002-C-003-A
89	FBN	PG	102		25	H	ESDV 1003	LINE HEATER (H-111)	1200	20			160	31000	38	-45	38	46500	WATER	100	NOTE 1	2		DIL-W002-C-003-A/004-A
60	FBN	PG	103		25	H	LINE HEATER (H-111)	89-BB-PG-104	1200	90			160	31000	38	-38	38	46500	WATER	100	NOTE 1	2		DIL-W002-C-004-A
89	BB	PG	104		25	H	60-FBN-PG-103	89-BB-PG-105	1000	15			80	4960	38	-29	38	7440	WATER	100	NO	2		DIL-W002-C-004-A
89	BB	PG	105		25	H	89-FBN-PG-102	SEPARATOR (V-115)	1000	15	F1		80	4960	38	-29	38	7440	WATER	100	NO	2		DIL-W002-C-004-A
89	BB	PG	106		38	H	SEPARATOR (V-115)	LINE HEATER (H-111)	1000	15			80	4960	38	-29	38	7440	WATER	100	NO	2		DIL-W002-C-004-A
60	BBC	PG	107		38	H	LINE HEATER (H-111)	114-BPS-PG-109	1000	10			80	4960	38	-45	38	7440	WATER	100	NO	2		DIL-W002-C-004-A/003-A
60	BBC	PG	108		38	H	89-BBC-PG-107	219 PIG LAUNCHER (L-102)	1000	30			80	4960	38	-45	38	7440	WATER	100	NO	2		DIL-W002-C-003-A
60	AB	FG	109				SKID Z-110	TEG G-140	200	15			80	1965	38	-29	38	2947	WATER	100	NO	2		DIL-W002-C-004-A
33	AC	PP	110				TK-150/TK-151	SKID Z-110	200	5			160	1965	38	-45	38	2947	WATER	10	NO	2		DIL-W002-C-003-A